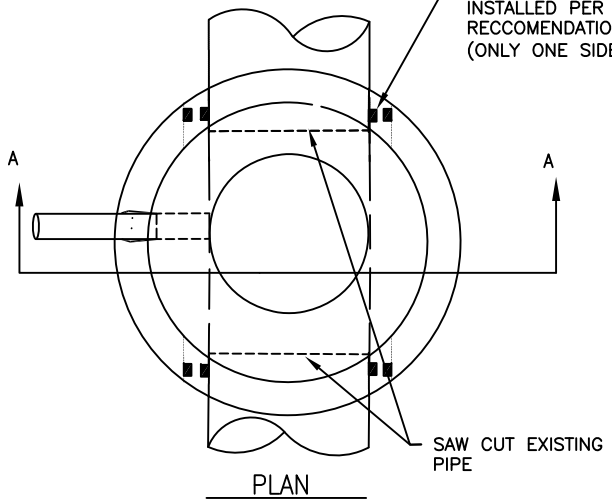

PLAN

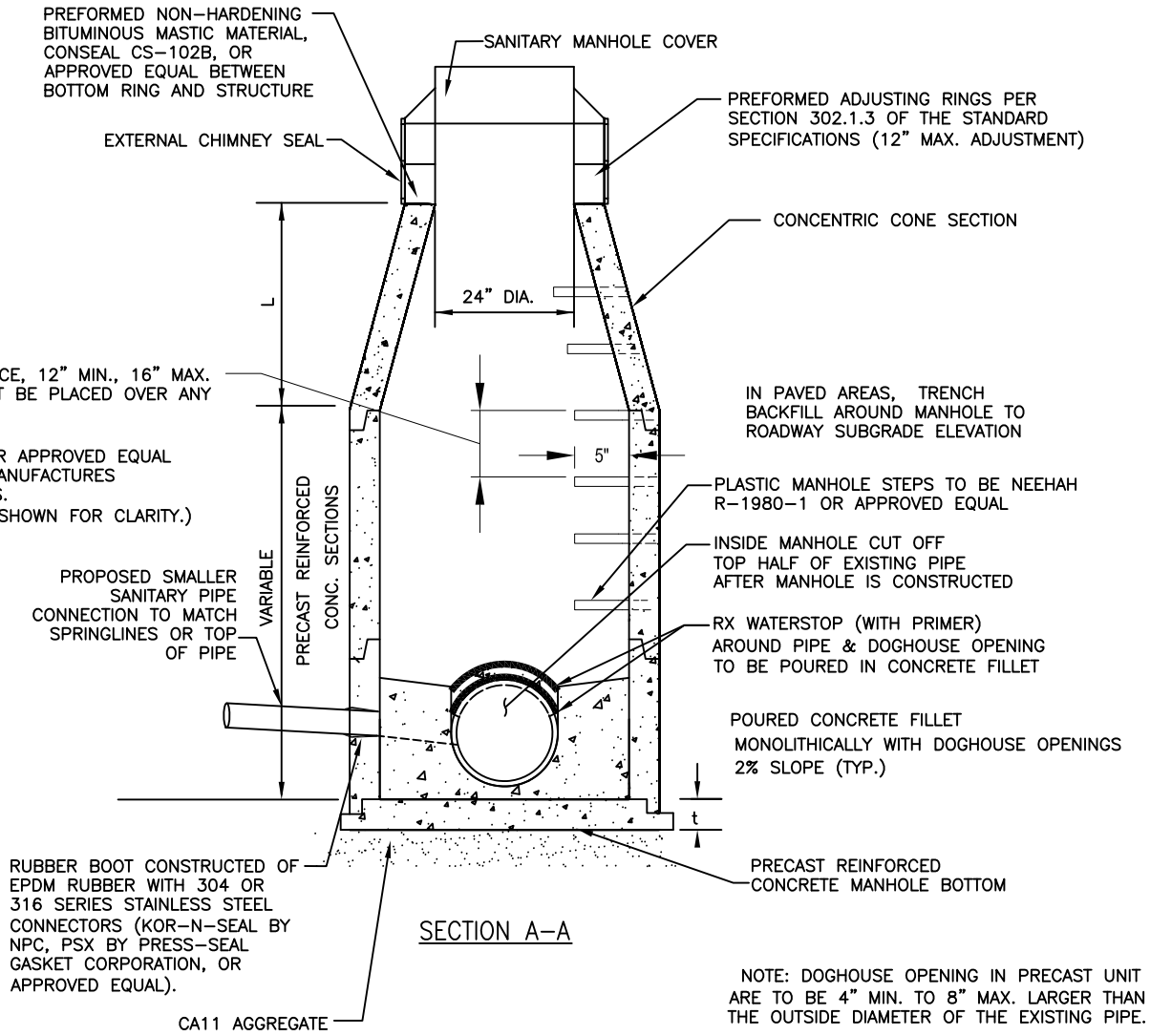

SECTION A-A

NOTE: DOGHOUSE OPENING IN PRECAST UNIT ARE TO BE 4" MIN. TO 8" MAX. LARGER THAN THE OUTSIDE DIAMETER OF THE EXISTING PIPE.

Revised:	Drawing Name	Drawing Number	
1.	STANDARD SANITARY DOGHOUSE CONNECTION	US-07	City of Crystal Lake Illinois
2.		Date: 08/18/2023	
3.		Drawn JRG / Checked PW	
4.			